PO BOX 4394
SANTA ROSA, CA
95402 USA

P (707) 525-9941
F (707) 575-7046
EMGPICKUPS.COM

0230-039Rr-A

INSTALLATION INFORMATION
EMG MODELS: **RETRO ACTIVE HUMBUCKERS**

TUNE-O-MATIC SPACING

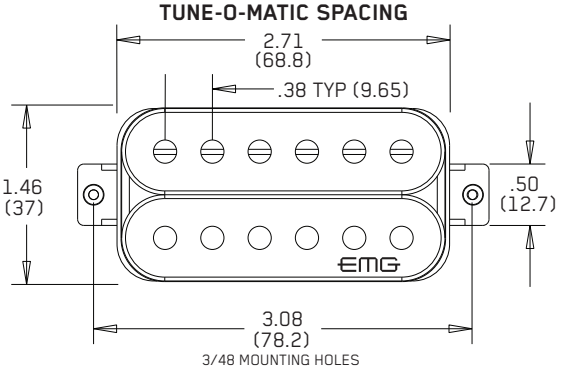

FLOYD ROSE SPACING

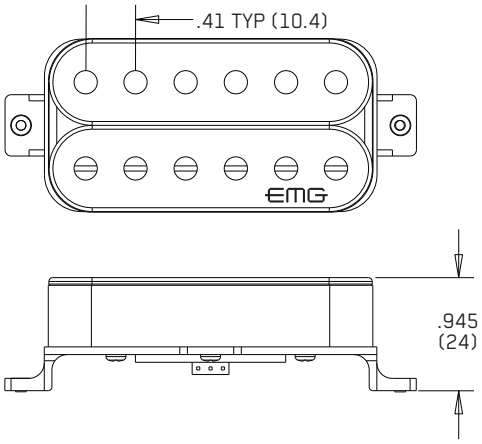

SPECIFICATIONS:

	MODEL:			
	350A	350C	360A	370C
Logo Color	Gold	Silver	Gold	Silver
Magnet Type	Alnico	Ceramic	Alnico	Ceramic
Coil Design	Classic	Classic	Classic	Overwound
Resonant Frequency (kHz)	2.70	2.80	2.70	2.15
Typical Output Noise (dBV)	-126	-126	-126	-126
Output Impedance (kΩ)	3.16	3.16	3.16	3.16
Current Draw @9V (mA) *	0.29	0.29	0.29	0.29
Current Draw @18V (mA) *	0.33	0.33	0.33	0.33
Maximum Supply (Volts DC)	27	27	27	27

Sets:					
	FAT 55	N		B	
	HOT 70	N			B
	SUPER 77		N		B

*Note: Current draw for one pickup, without any active EQ accessories

INSTALLATION NOTES:

All EMG Active Pickups are compatible with each other. EMG accessories (VLPF, EXG, SPC, RPC, etc.) can be added to any EMG Pickup System without requiring an extra battery. EMG Pickups typically do not require string grounding, but you may connect your bridge ground wire to an available "G" terminal on the B245 Pickup Buss. Use the included 25 kΩ controls for best results. If your output jack is a long panel style, you will need a stereo version, such as the SwitchCraft 152B, and soldering will be required (see bottom of Page 3). We recommend setting the pickup height 3-5mm from the strings when fretting high on the neck. Make small adjustments as needed for string balancing. Additional wiring diagrams are available at **emgpickups.com**.

INCLUDED WITH EACH PICKUP SET:

2 VOLUME CONTROLS (25K)
2 TONE CONTROLS (25K)

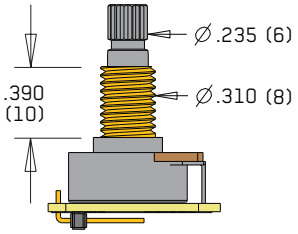

ADJUSTMENT
SCREWS & SPRINGS (2 sets)



2 PICKUP CABLES, 15" (38cm) and 11" (28cm)



4 CONNECT CABLES 5.5" (14cm)



OUTPUT CABLE 6" (15cm)



BATTERY CABLE 7" (18cm)



BATTERY
BUSS

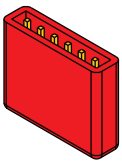

STEREO OUTPUT
JACK

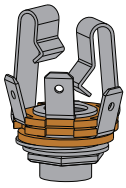

2 PICKUP IN/ OUT
BATTERY BUSS

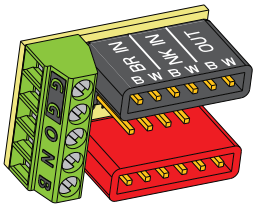

WARRANTY

All EMG Pickups and accessories are warranted for a period of two years. This warranty does not cover failure due to improper installation, abuse or damage. If upon examination the pickup is determined to be defective, a replacement will be made. Warranty replacement products are covered by this same warranty. This warranty covers only those pickups and accessories sold by authorized EMG Dealers. This warranty is not transferable.

© 2026 Copyright EMG INC. All Rights Reserved.

Installation Instructions:
EMG Models: RA Humbuckers

General Notes:
Every attempt has been made to make this a solderless installation.
There are some instances where this is not possible;
1) If your instrument uses a long panel output jack and you had passive pickups you will need a new stereo output jack, the Switchcraft 152B is recommended. Soldering to the new jack will be required, see Diagram #5c on Page 3.
2) Some instruments may already have a battery holder installed. In that case soldering may be required to the battery buss, see Page 4.
3) Instruments with two pickups may need soldering to the selection switch in some installations.

Installation (Two Pickup Guitars with Selection switch):
Guitars with two pickups and a selection switch will use the EMG B245 Pickup Buss shown in Diagram #2. The Pickup Buss is a convenient way to wire your guitar without soldering.

It's best to find a place to mount the Buss in the control cavity before starting. Then, after all cables are routed, use the velcro to mount it securely.

If you're using an EMG Solderless 3-Position Blade Switch (B165 or B162, sold separately), you will **not** use the B245 Buss . Instead, follow the instructions included with the switch.

2 Pickups / Toggle Select Switch / Master Volume and Tone

Refer to Diagrams #1, #2, and #3
1) Install the Pickups and and route the Pickup cables to the control cavity.
   If the cables are too long, wind up the excess and keep it under the pickup.
2) Mount the Volume and Tone controls into the body.
   Plug both Pickup cables into the B245 Pickup Buss (BLACK Shroud) as shown,
   Refer to Diagram #2
   Bridge Pickup to position 1
   Neck Pickup to position 2
3) Plug a connect cable from the Pickup Buss (position 3) to the Master Volume control as shown in Diagram #3.
4) Plug a connect cable from the Master Volume to the Master Tone as shown.
5) Strip the insulation from the switch wires and Insert them into the GREEN Terminal Block and tighten the screws with a small screwdriver.
   Bridge pickup goes to the "B" Terminal
   The Neck pickup goes to the "N" Terminal
   The Output of the switch goes to the "O" Terminal
   If there is a ground wire coming from the switch, insert it into one of the "G" terminals on the block. You may also insert your bridge ground wire here.
   If using the EMG solderless 3 way toggle refer to Diagram #5a. If using a hardwired 3 way blade or lever switch see Diagram #5b.
6) Plug the output cable onto the Master Tone control and connect the output wires to the output jack by pushing the connectors on as shown.
   WHITE wire onto the TIP (T) contact,
   BLACK wire onto the SLEEVE (S) contact
   BLACK Battery Negative wire onto the RING (R) contact.

******Tips and Tricks**** Start your installation by:**
1) Determining which type of output jack your instrument has. Stereo 12B type is included, but if you have a long panel jack, SwitchCraft 152B Long Panel Jack will be required.
2) Remove the strings, remove any existing Pickups and controls (remember the order and function of each control)
3) Determine a good spot for the Pickup Buss and make sure the cable or wires from the selection switch will reach the Pickup Buss,
4) Install the EMG Volume and Tone Controls and tighten them in.
5) Install the pickups, keeping any excess cable under the pickup rather than in the control cavity.

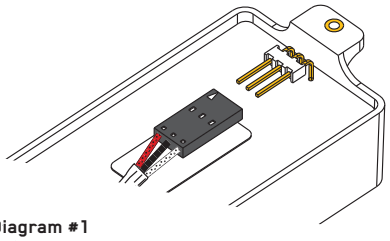

Diagram #1
Insert the plug onto the 3 pin header of the pickup as shown above.
Note the orientation arrow.

7) Plug the RED Wires of the pickups onto the V+ Supply Buss (RED Shroud) along with the RED of the battery clip.
   Extra pins on the V+ Supply Buss are for EMG Accessories.
8) Put the battery in insulating foam and place it securely in the control cavity.

We suggest that you plug in the instrument and test it before closing the control cavity.

Diagram #2

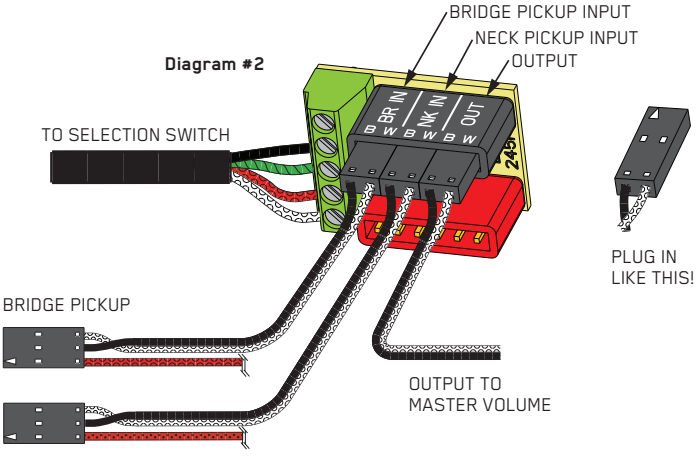

Diagram #3
2 Pickups
Toggle Style Select Switch
Master Volume & Master Tone

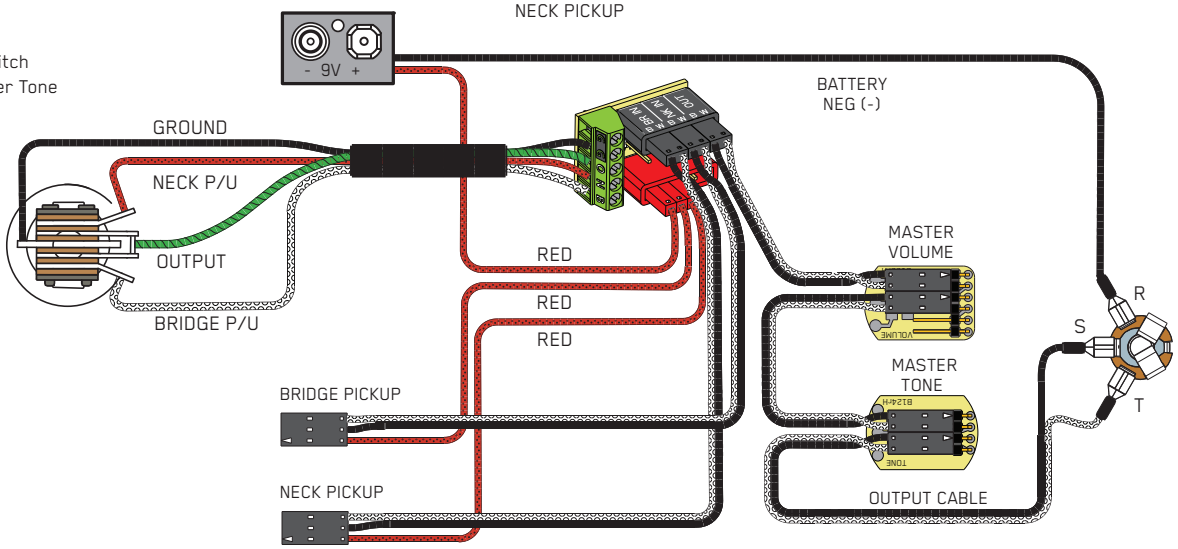

2 Pickups / Toggle Select Switch / 2 Volumes and Master Tone

Refer to Diagram #4

1) Install the Pickups and route the Pickup cables to the control cavity.
   If the cables are too long, wind up the excess and keep it under the pickup.
2) Mount the Volume and Tone controls into the body.
   Plug both pickup cables onto the Volume controls as shown.
   Plug a connect cable from the Bridge Volume control to the Pickup Buss (Position 1)
   Plug a connect cable from the Neck Volume control to the Pickup Buss (Position 2)
3) Plug a connect cable from the Pickup Buss (position 3) to the Master Tone control as shown.
4) Strip the insulation from the switch wires and Insert them into the GREEN Terminal Block and tighten the screws with a small screwdriver.
   Bridge pickup goes to the "B" Terminal
   The Neck pickup goes to the "N" Terminal
   The Output of the switch goes to the "O" Terminal
   If there is a ground wire coming from the switch, insert it into one of the "G" terminals on the block. You may also insert your bridge ground wire here.
5) Plug the output cable onto the Tone control and connect the wires to the output jack by pushing the connectors on as shown.
   WHITE wire onto the TIP (T) contact,
   BLACK wire onto the SLEEVE (S) contact
   BLACK Battery Negative wire onto the RING (R) contact.
6) Plug the RED Wires of the pickups onto the V+ Supply Buss (RED Shroud) along with the RED of the battery clip. Extra pins are for EMG Accessories.
7) Put the battery in insulating foam and place it securely in the control cavity.

We suggest that you plug in the instrument and test it before closing the control cavity.

Diagram #4

2 Pickups
Toggle Style Switch
2 Volumes (Dependent)
Master Tone

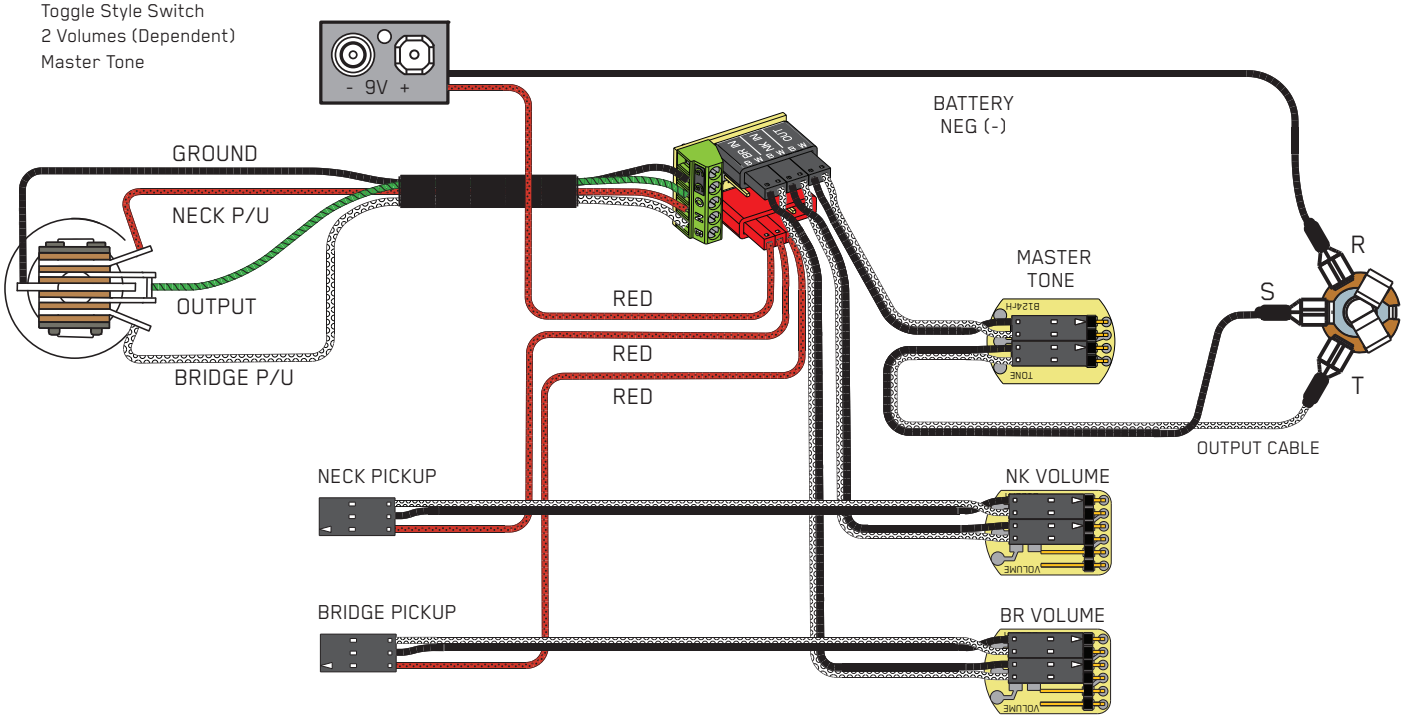

Diagram #5a

Connecting to EMG Solderless 3-Way Toggle (B514 or B348):
Install the 4 pin Connector housing on the switch as shown in the diagram below. Install both of the 2 pin connectors on to the 4 pin connector between the black and red housings as shown. The green terminal blocks will not be used.
For more details, see the B514 or B348 Instructions.

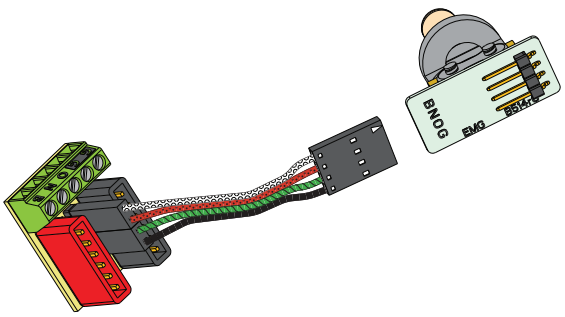

Diagram #5b

2 Pickups
Lever Style Select Switch

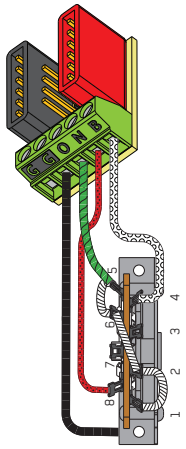

Diagram #5c

Soldering to the 152B Panel Jack:
If your instrument has a long Panel Jack like the one below you will have to solder the output cable as shown.
Ground (Black) to the sleeve
Signal (White) to the Tip
Battery Negative (Black) to the Ring

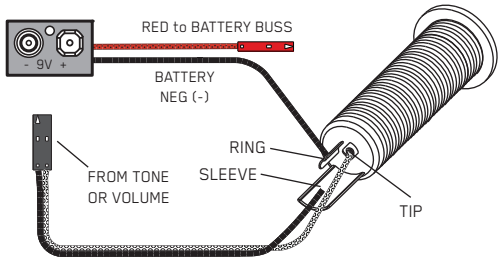

2 Pickups / Toggle Select Switch / 2 Volumes and 2 Tones
Refer to Diagram #6

1) Install the Pickups and route the cables to the control cavity.
   If the cables are too long, wind up the excess and keep it under the pickup.
2) Mount the Volume and Tone controls into the body
   Plug both Neck and Bridge pickup cables onto the Volume Controls as shown.
   Plug a connect cable from the Bridge (BR) Volume control to the Pickup Buss (Position 1). See Diagram #6
   Plug a connect cable from the Neck (NK) Volume control to the Pickup Buss (Position 2). See Diagram #6
3) Plug a connect cable from Bridge (BR) Volume to Bridge (BR) Tone as shown.
4) Plug a connect cable from Neck (NK) Volume to Neck (NK) Tone as shown.
5) Strip the insulation from the switch wires and Insert them into the GREEN Terminal Block and tighten the screws with a small screwdriver.
   Bridge pickup goes to the "B" Terminal
   The Neck pickup goes to the "N" Terminal
   The Output of the switch goes to the "O" Terminal
   If there is a ground wire coming from the switch, insert it into one of the "G" terminals on the block. You may also insert your bridge ground wire here.
6) Plug the output cable onto the Pickup Buss (Position 3) and push the connectors onto the jack as shown.
   WHITE wire onto the TIP (T) contact,
   BLACK wire onto the SLEEVE (S) contact
   BLACK Battery Negative wire onto the RING (R) contact.
7) Plug the RED Wires of the pickups onto the V+ Supply Buss (RED Shroud) along with the RED of the battery clip. Extra pins are for EMG Accessories.
8) Put the battery in insulating foam and place it securely in the control cavity.

We suggest that you plug in the instrument and test it before closing the control cavity.

Diagram #6
2 Pickups
Toggle Style Switch
2 Volumes (Dependent)
2 Tones

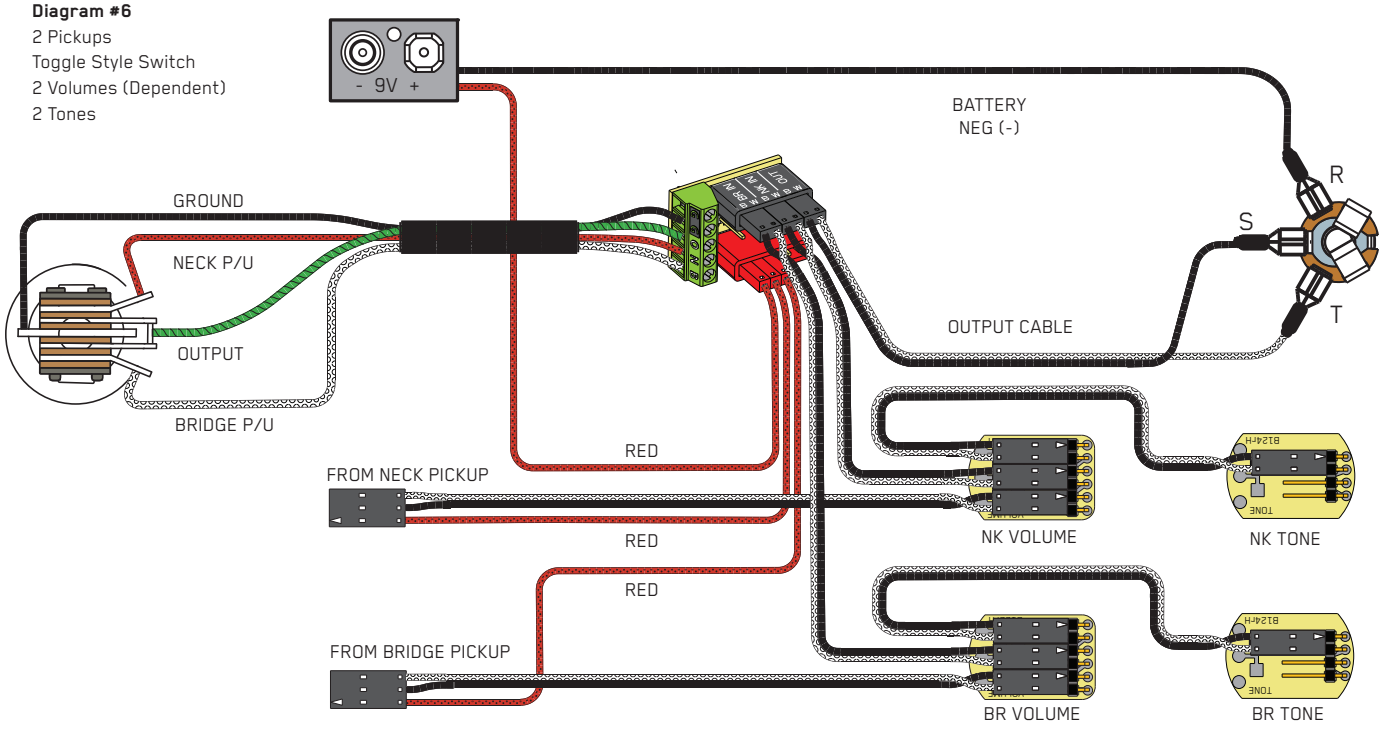

If the instrument has a Battery Holder:

If your instrument has a 9 or 18 Volt battery holder you can still use the EMG Connectors to supply power to the pickups. Simply cut and strip the wires from the battery clip provided. Twist the wires together and use shrink tubing to cover the connections. Soldering the wires is preferred.

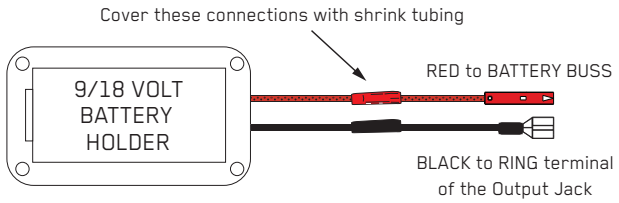

COMPLIANCE

CE UKCA

EMG Pickups and Accessories comply with the following regional certifications.

Region	Certification
Europe	CE, WEEE, REACH, RoHS
North America	RoHS
USA (California)	California Prop 65
UK	UKCA

ELECTRONIC PRODUCTS AND BATTERY DISPOSAL

All electrical and electronic products and batteries must be collected separately by a local collection system. Do not dispose of these items with your normal household waste. To prevent possible harm to the environment or human health from uncontrolled waste disposal, please recycle the product(s) responsibly.